2009 AAU Junior National Volleyball Championships
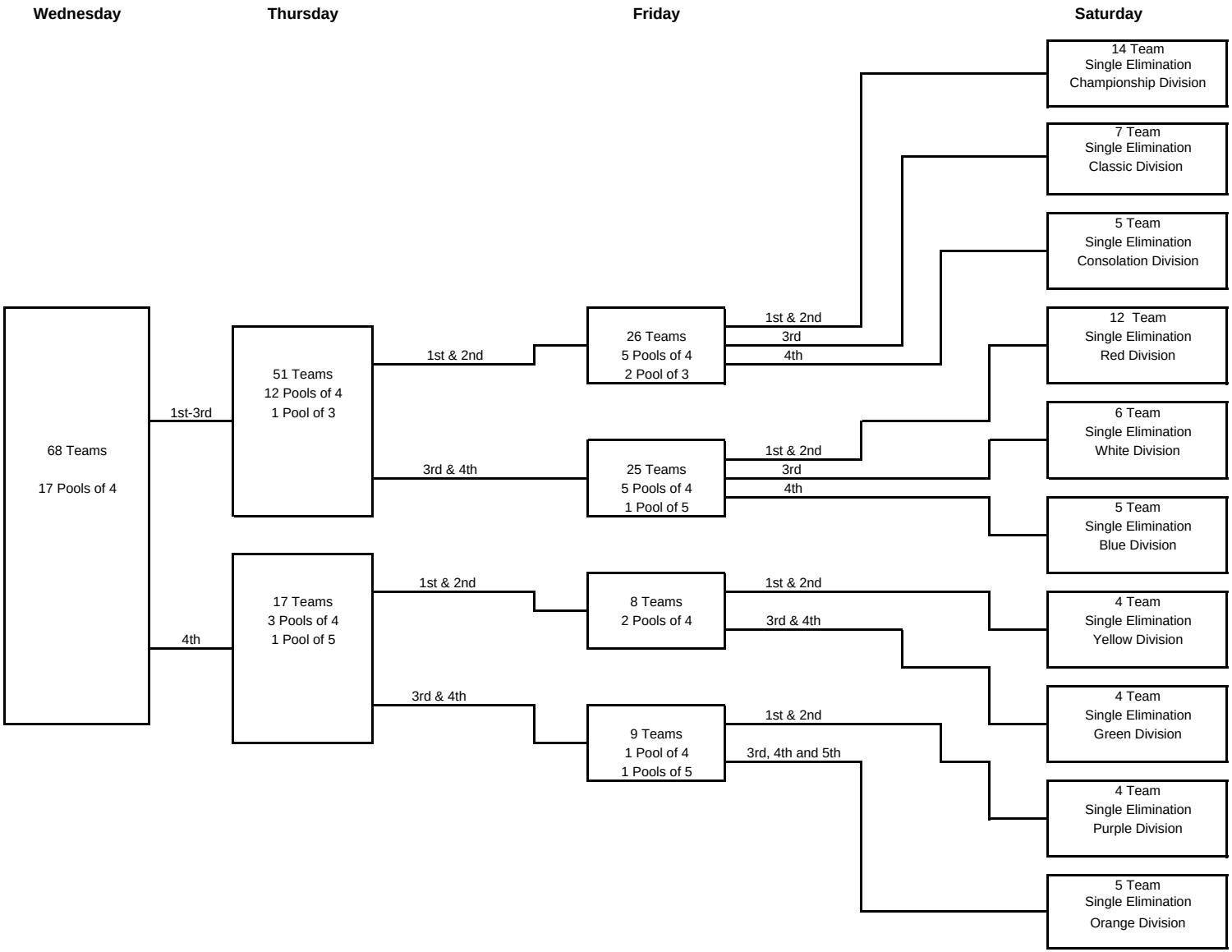
17 and Under Club Girls - 68 Teams